CH-47 Chinook

TO 00-105E-9

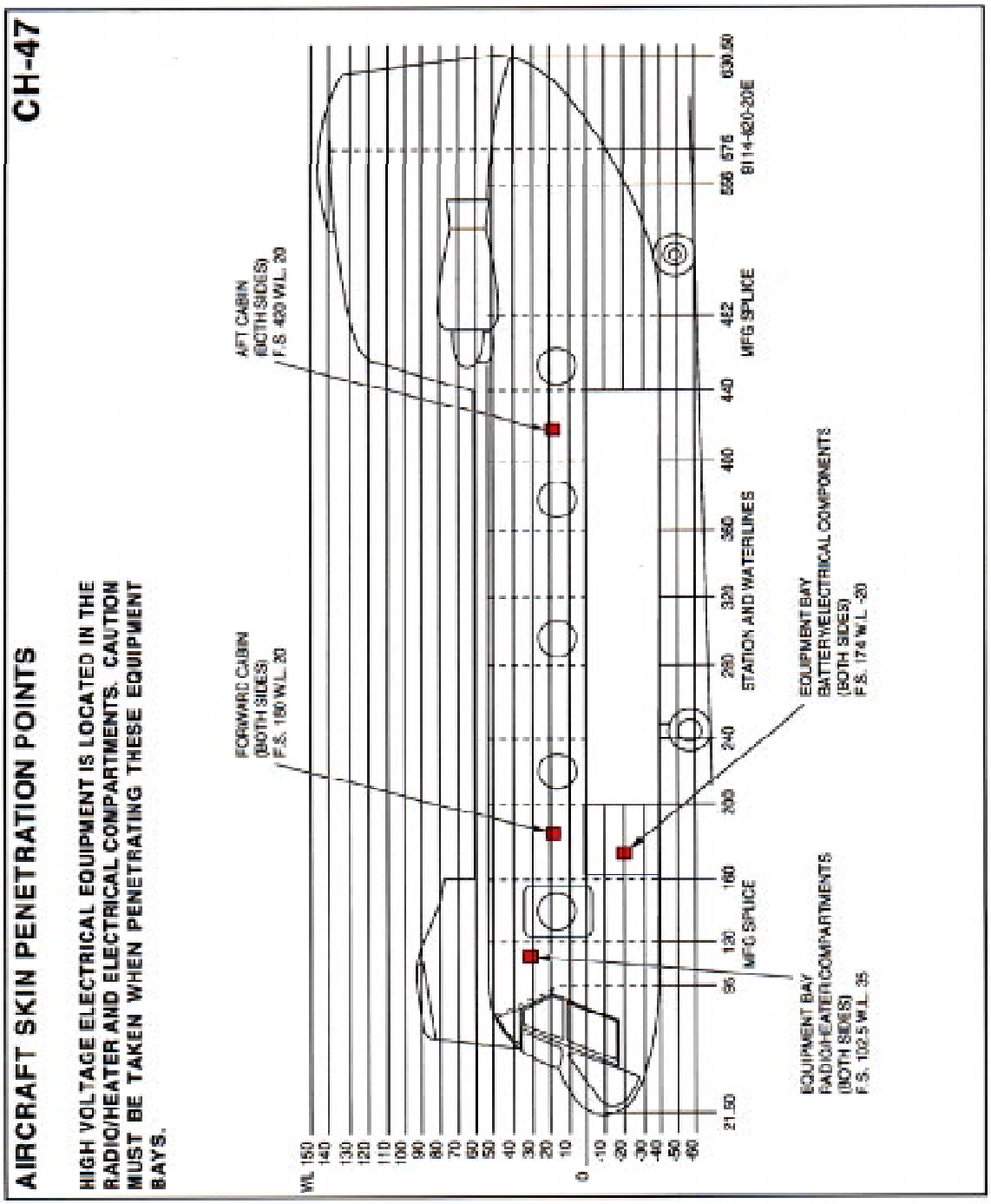

13-14

AIRCRAFT SKIN PENETRATION POINTS - Continued

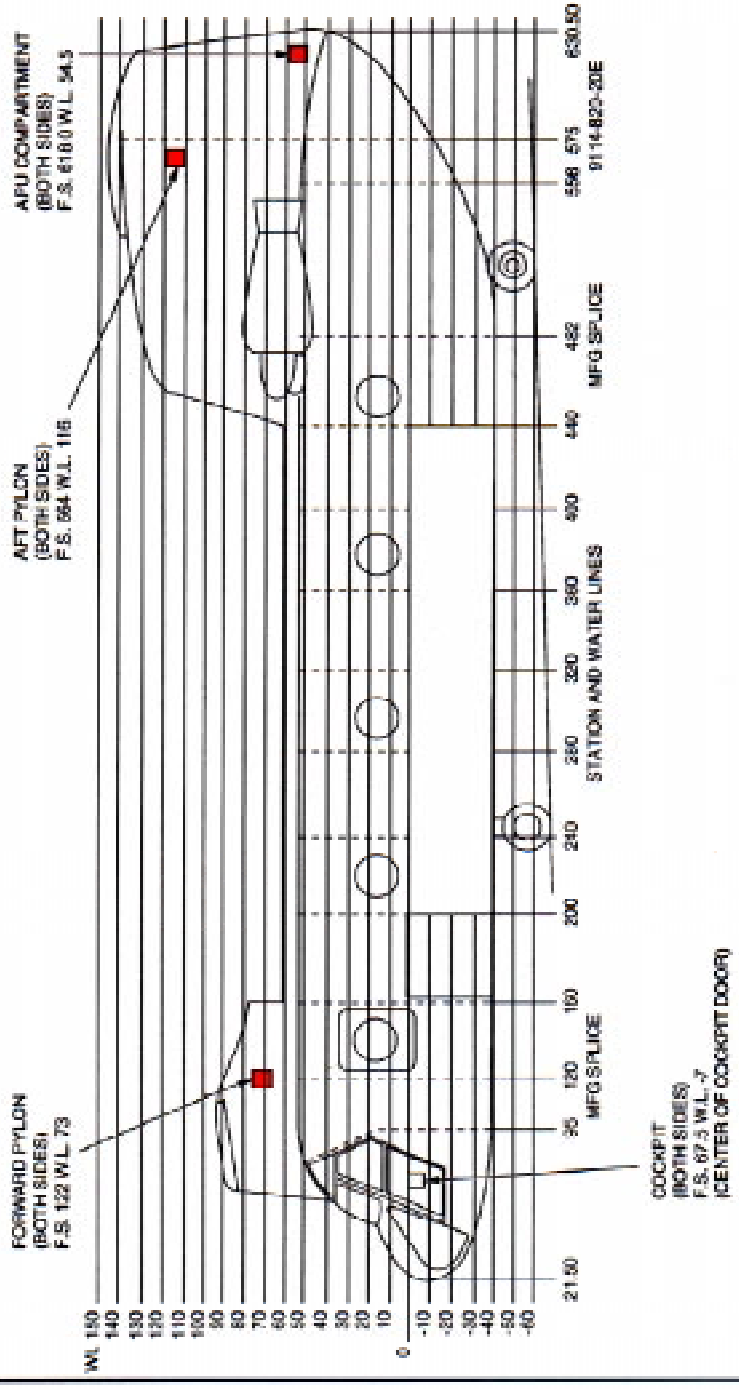

SPECIAL TOOLS/EQUIPMENT
Power Rescue Saw
Disarming Tool

CH-47

AIRCRAFT ENTRY
ALL MODELS

1. NORMAL ENTRY

NOTE:
The pilot's and copilot's doors are jettisonable doors only. The cabin entrance door is a two section door. The upper half of the door rolls up, the lower half swings out and down forming a step.

a. Rotate handle, located on upper half of cabin door, roll door up.

b. Rotate handle, located on lower half of cabin door, pull door out and down.

2. EMERGENCY ENTRY

a. Push trigger button in center of handle and rotate emergency release handle, located below and aft of pilot's and copilot's jettisonable doors, pull door out.

b. Pull emergency release tab in lower corner of escape hatches, located on upper cabin door, left forward of side of fuselage and cargo door out and push panels in.

NOTE:
Sufficient hydraulic pressure must be available to actuate cargo ramp uplocks. When uplocks are released, cargo ramp will free fall slowly.

c. Open ramp control access door, located aft right side of fuselage near ramp, place ramp control lever to DOWN position (aft).

3. CUT-IN

a. Cut-in areas as marked in center of upper fuselage between windows on both sides.

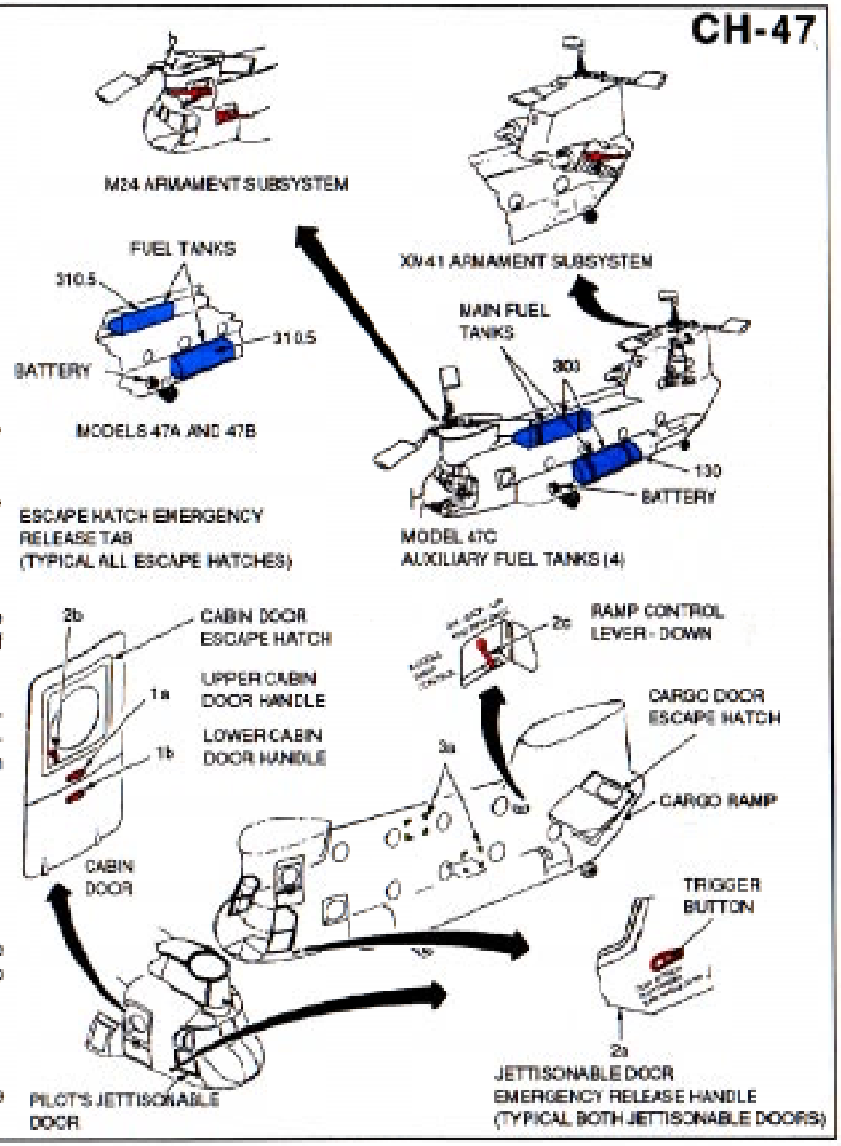

ENGINE SHUTDOWN AND AIRCREW EXTRACTION

1. NORMAL SHUTDOWN

a. Position engine condition levers, located on control pedestal or overhead switch panel, to STOP.

b. Position fuel valve or pump switches, located on overhead switch panel, to CLOSE or OFF.

c. Position battery switch, located on overhead switch panel, to OFF.

NOTE:
If engines fail to shutdown, pull fire pull fuel shutoff T-handles, located at top center of instrument panel, OUT.

2. AIRCREW EXTRACTION

a. Unlatch seat belts and remove shoulder harness from crewmember(s).

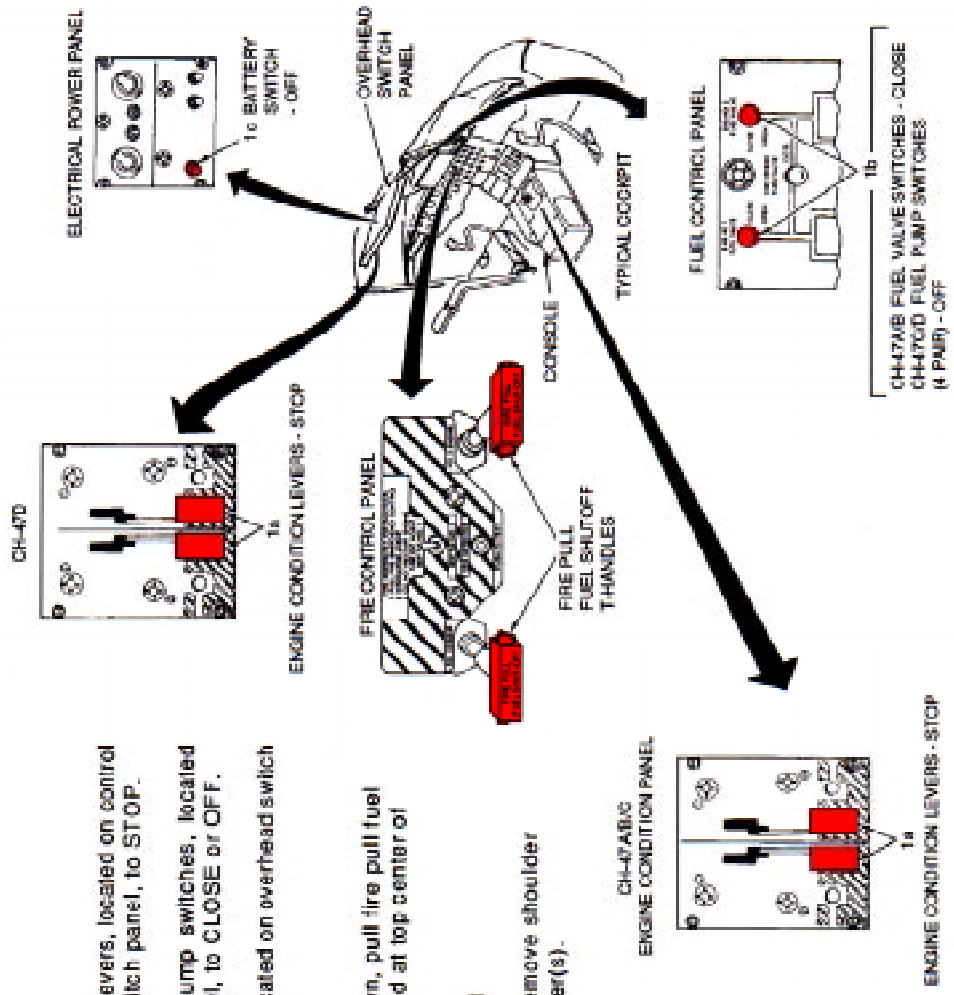

CH-47

CH-54 Tahre-Skycrane

TO 00-105E-9

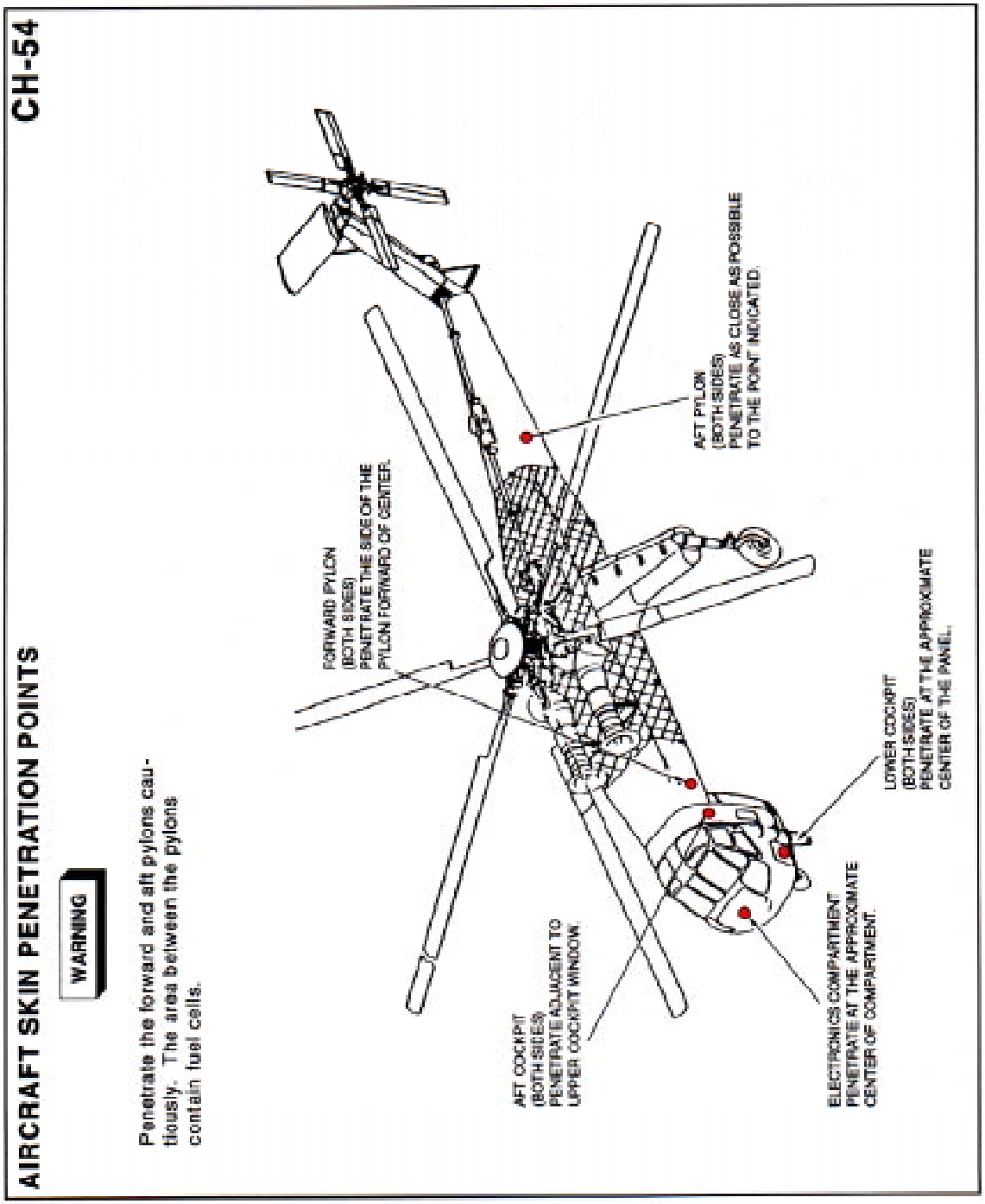

13-18

SPECIAL TOOLS/EQUIPMENT
Power Rescue Saw

AIRCRAFT ENTRY
ALL MODELS

1. NORMAL ENTRY

a. Rotate entrance handle, located on aft edge of pilot's and copilot's entrance door, swing door out.

b. Rotate entrance handle, located on aft edge of rear cockpit entrance door on right side of crew compartment, swing door out.

c. Rotate entrance handle, located on aft edge of pod access doors, swing door out.

2. EMERGENCY ENTRY

a. Rotate emergency jettison release handle, located at forward lower corner of pilot's and copilot's entrance door, pull door out.

b. Rotate emergency jettison release handle, located at forward lower corner of rear cockpit entrance door on right side of crew compartment, pull door out.

c. Pull exit release tab, located lower aft corner of each pod window, cut and remove window.

3. CUT-IN

a. Cut around windows and access doors of pod as marked.

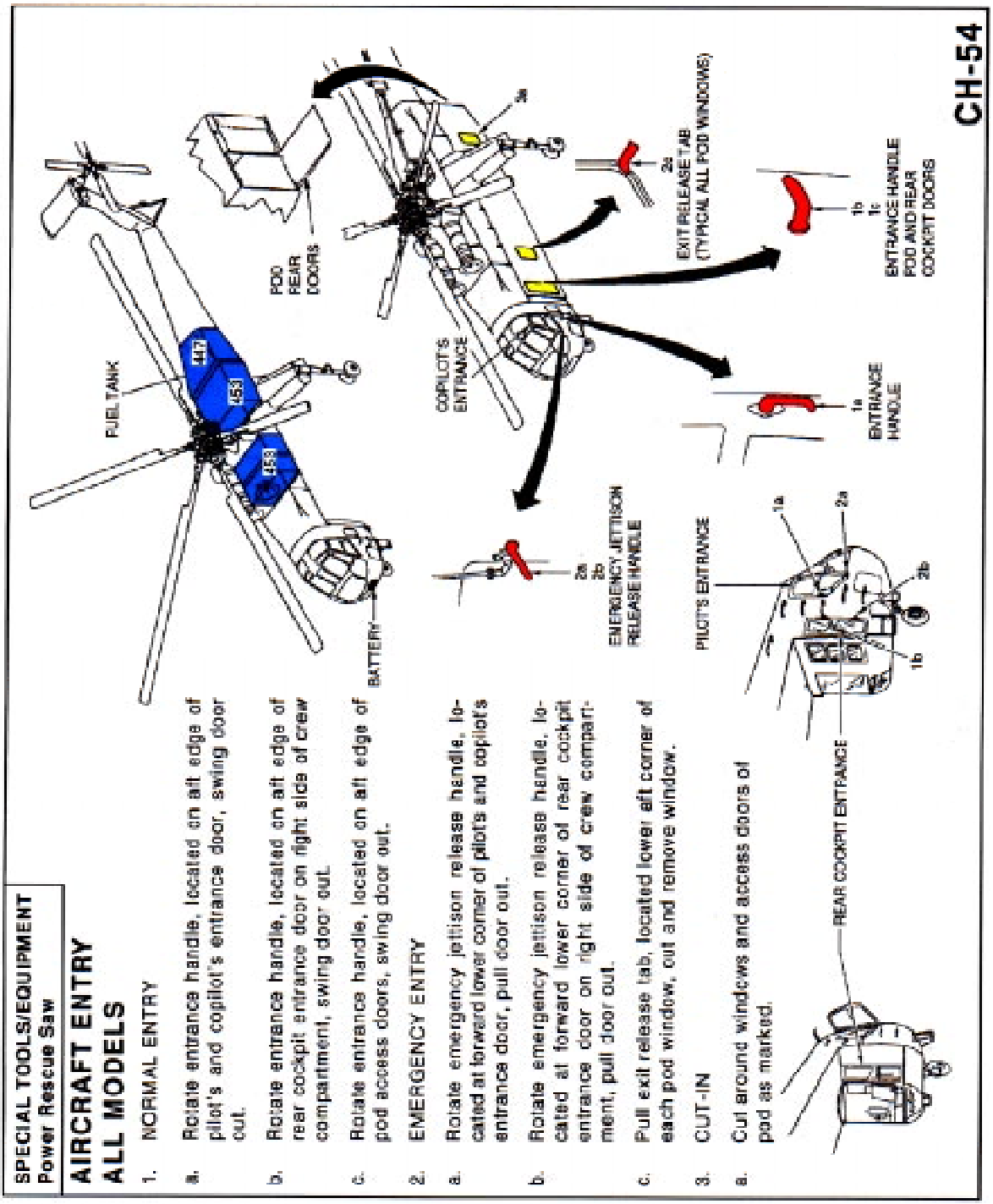

ENGINE SHUTDOWN AND AIRCREW EXTRACTION

CH-54

1. ENGINE SHUTDOWN

NOTE:
N1 levers have a detent in GRD IDLE position. To pass through the detent to SHUTOFF position, pull out on levers.

a. Place N1 levers, located on overhead control quadrant, to SHUTOFF position.

b. Place fuel valve shutoff handle, located on overhead control quadrant, in CLOSED position.

c. Place fuel booster pump switches, located in upper panel of center console, to OFF position.

d. Place ignition switches, located in center panel center console, to OFF position.

e. Place battery switch, located in center panel of center console, to OFF position.

2. AIRCREW EXTRACTION
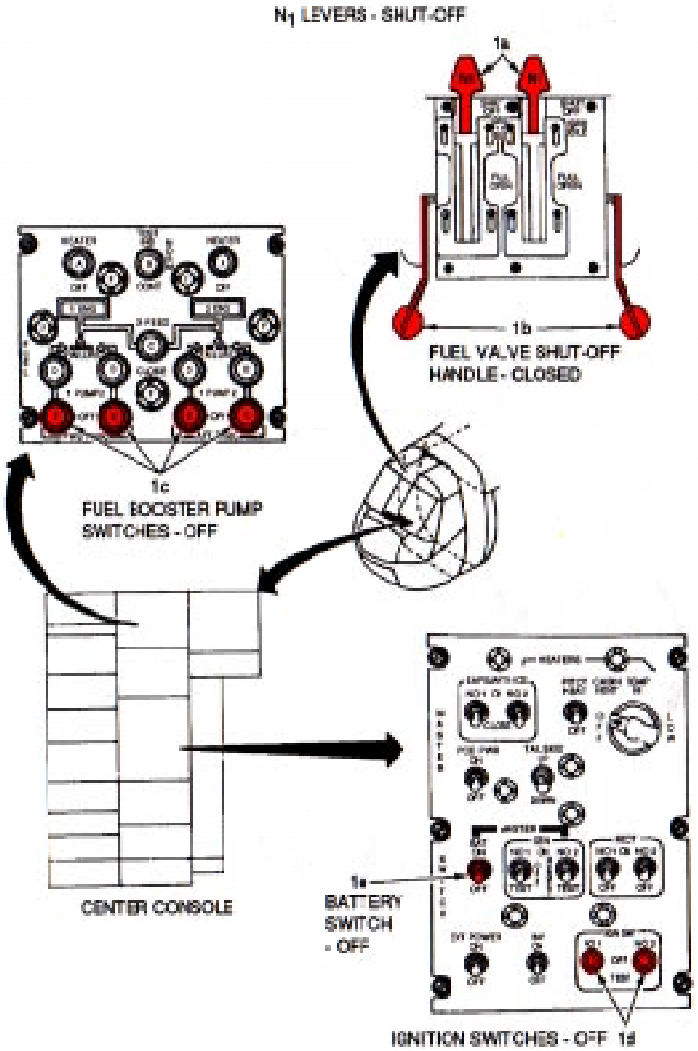
a. Unlatch lap belts and remove shoulder harness from crewmember(s).